OK-500R (Hexagon Socket Head Cap Screw) (FW2)

OK-500S (Upset Head Bolt) (FW2)

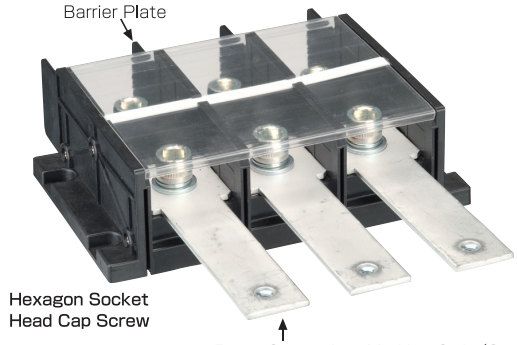

※Plate, Copper bar, Marking Strip (Optional)

Pitch (terminal to terminal) : 50mm

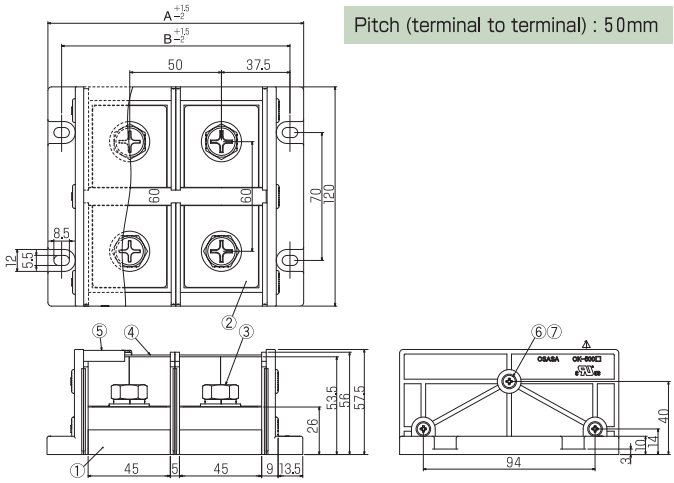

Specifications

Electrical Rating	600V, 500A
Insulation Resistance	DC500V, 1000MΩ
Withstanding Voltage	AC2500V
Storage Temperature Rating	−40℃～+90℃
Usage Temperature Rating	−40℃～+90℃

Measurements List of A & B (P : Number of terminals)

P	1	2	3	4	5	6	7	8	9	10	11	12	13	14
A		140	190	240	290	340	390	440	490	540	590	640		
B		125	175	225	275	325	375	425	425	525	575	625		

Allowance 1～6P ±1.5 7～12P ±1.8

Composition

No.	Part Name	Materials	Flame Class	Treatment	Remarks
①	Base	PBT	94V−0		Black
②	Terminal	Brass		Ni	
③	Upset head Bolt M12×25L	Steel		$Cr^{3+}Zn$	
④	Marking Strip	PET			White
⑤	Cover	Polycarbonate			Transparency
⑥	Joint Shaft M4	Steel		Ni	
⑦	Nut M4	Steel		Ni	